Electromagnetic flowmeter type PEM-1000

New special version for installation without straight in/out sections

- ✓ **Nominal size: DN10...1000 / ANSI 0,5...40“**
- ✓ **Maximum static pressure 1,6MPa**
- ✓ **Accuracy: 0,5% or 0,2%**
- ✓ **Analog outputs: 4...20mA,**
- ✓ **Communication interface: Modbus RTU / RS 485**
- ✓ **Pulse output (uni- or bidirectional) or frequency output**
- ✓ **Version for installation without straight in/out sections**
- ✓ **Wireless setup via smartphone or tablet**

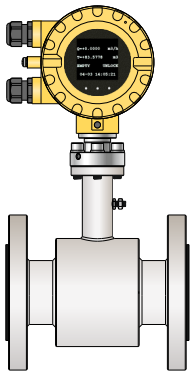

PEM-1000ALW

Application

Electromagnetic flowmeter for bidirectional measurement of liquids with a minimum conductivity of ≥ 5 µS/cm:

- Acid, alkalis
- Paints
- Pastes
- Water, wastewater, etc.

Measuring principle:

Following Faraday's law of magnetic induction, a voltage is induced in a conductor moving through a magnetic field. In the electromagnetic measuring principle, the flowing medium is the moving conductor. The voltage induced is proportional to the flow velocity and is supplied to the amplifier by means of two measuring electrodes. The flow volume is calculated by means of the pipe cross-sectional area.The DC magnetic field is created through a switched direct current of alternating polarity.

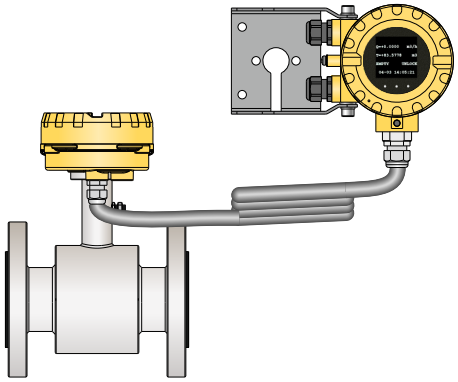

PEM-1000NW

Measuring system

The measuring system consists of a transmitter and a sensor.
Two versions are available:

- Compact version: Transmitter and sensor form a mechanical unit PEM-1000ALW
- Remote version: Sensor is mounted separate from the transmitter PEM-1000NW

Advantages

- ➢ Flexible and clever assembling system
- ➢ Easy and fast-moving change from compact to remote version
- ➢ Innovative and high-power transmitter for every application
- ➢ Robust and resistant cover of sensor and transmitter

Flow value table [m^3/h]

DN acc. DIN	Recommended flow values		Factory settings				
			Current output 4...20mA		Pulse output		Cut-off level for small flows (v~0,1 [m/s])
	~$Q_{(min)}$	~$Q_{(max)}$	Measuring range	Flow speed (for URV)	Volume / pulse	Number of pulses / m^3	
	[m^3/h]	[m^3/h]	[m^3/h]	[m/s]	[m^3/impuls]		[m^3/h]
10	0,08	2,8	0÷1	3,54	0,0000025	400000	0,03
15	0,19	6,4	0÷2	3,14	0,000005	200000	0,06
20	0,34	11	0÷4	3,54	0,00001	100000	0,12
25	0,5	18	0÷5	2,83	0,0000125	80000	0,15
32	0,9	29	0÷10	3,45	0,000025	40000	0,3
40	1,4	45	0÷15	3,32	0,00004	25000	0,45
50	2,1	71	0÷20	2,83	0,00005	20000	0,6
65	3,6	119	0÷30	2,51	0,0001	10000	0,9
80	5	181	0÷50	2,76	0,000125	8000	1,5
100	8	283	0÷100	3,54	0,00025	4000	3
125	13	442	0÷150	3,40	0,0004	2500	4,5
150	19	636	0÷200	3,14	0,0005	2000	6
200	34	1131	0÷360	3,18	0,001	1000	10,8
250	53	1767	0÷500	2,83	0,00125	800	15
300	76	2545	0÷760	2,99	0,002	500	22,8
350	104	3464	0÷1000	2,89	0,0025	400	30
400	136	4524	0÷1300	2,87	0,004	250	39
500	212	7069	0÷2000	2,83	0,005	200	60
600	305	10179	0÷3000	2,95	0,008	125	90
800	543	18096	0÷5000	2,76	0,0125	80	120
1000	848	28274	0÷8000	2,83	0,025	40	240

Technical data

Specification for PEM-1000 control unit

Electrical conductivity of the medium	≥ 5μS/cm
Input resistance	≥ 10^{10}Ω
Accuracy	±0,5% of reading at 20÷100% $Q_{10m/s}$ special version: ±0,2% of reading at 20÷100% $Q_{10m/s}$ (for reference conditions)*
Low flow rejection	adjustable, any value
Actual flow	both directions (l/s, m^3/h, m^3/s, other)
Totalizer	3 counters: total, positive, negative (m^3, other)
Configuration	LCD display/buttons or Modbus RTU via RS485
Empty pipe detection	cyclic, configurable
Analog output	4÷20mA/500Ω active output (passive output – on request)
Pulse/frequency output	max. 30V/10mA DC 0,1…2000Hz in frequency mode up to 500Hz in pulse mode
2-state output OC	2, open collector, max. 35V DC for each galvanic insulation, reverse polarity protection
Communication output	Modbus RTU/RS 485 galvanic insulation
2-state input (on request)	5…35V DC/2mA passive input, galvanic insulation, reverse polarity protection
Power supply	90..260V AC/50Hz/15VA 10…36V DC/15W (reverse polarity protection)
Protection class	IP66 (IP67 on request)
Ambient temperature	-20…60°C
Weight	3,5kg

* Reference conditions according to PN-EN 29104:2003

Specification for PEM-1000 sensor

Nominal size	DN10÷1000 / ANSI 0,5"…40"
Max. static pressure	standard: 1,6MPa (2,5MPa, 4MPa on request)
Process connection	flange DIN, ANSI
Ambient temperature	-20÷60°C
Liner temperature range	Hard Rubber: -5÷90°C Neoprene: 0÷80°C Teflon PTFE: -25÷90°C (special version -25÷130°C)
Connection cable (remote version)	standard: 8m (other on request)
Electrodes material	316L Hastelloy, Tantalum (on request)
Liner	Hard rubber DN40÷1000 Neoprene DN40÷1000 Teflon PTFE DN15÷500
Casing and flange material	standard : carbon steel
Rustproofing	paint
Excitation coils supply	from the transmitter
Excitation of coils isolation class	E
Protection class	standard: IP67, (IP68 on request)
Measuring principle	electromagnetic
Accessories	grounding rings

PEM-1000ALW - compact version

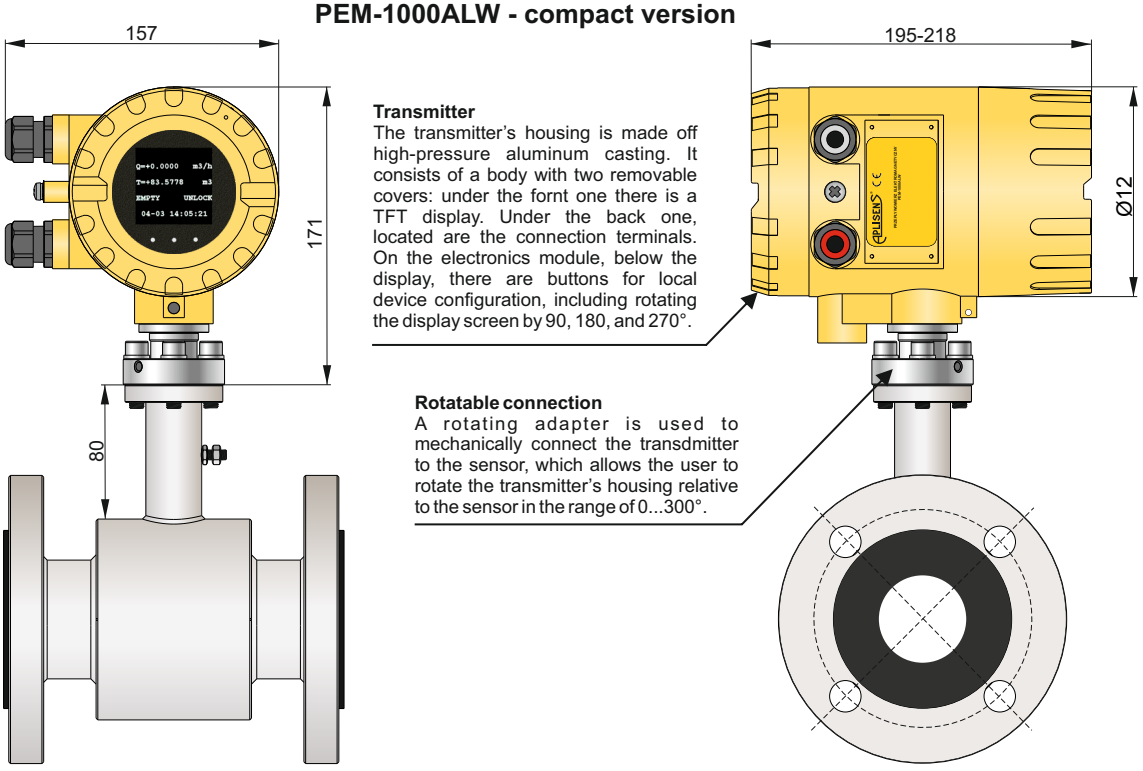

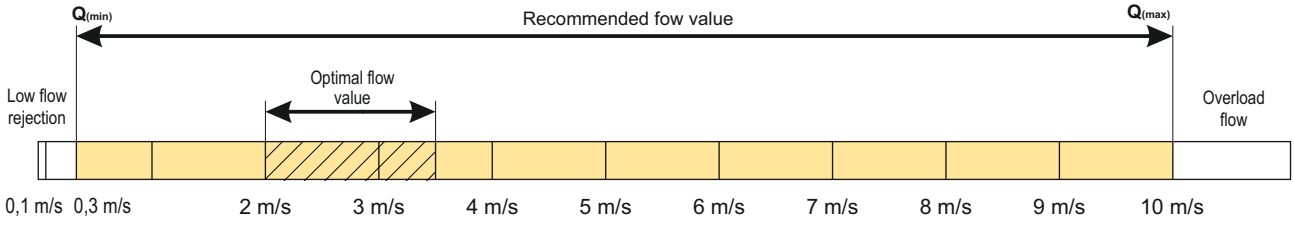

PEM-1000NW - remote version

Junction box

The electrical connection of the sensor with the transmitter is made in a junction box placed on the measuring sensor. When installing the sensor below the ground or water surface and if the sensor is subject to water flooding, it is necessary, after connecting the cable, to fill the interior of the junction box with a protective silicone gel available upon request.

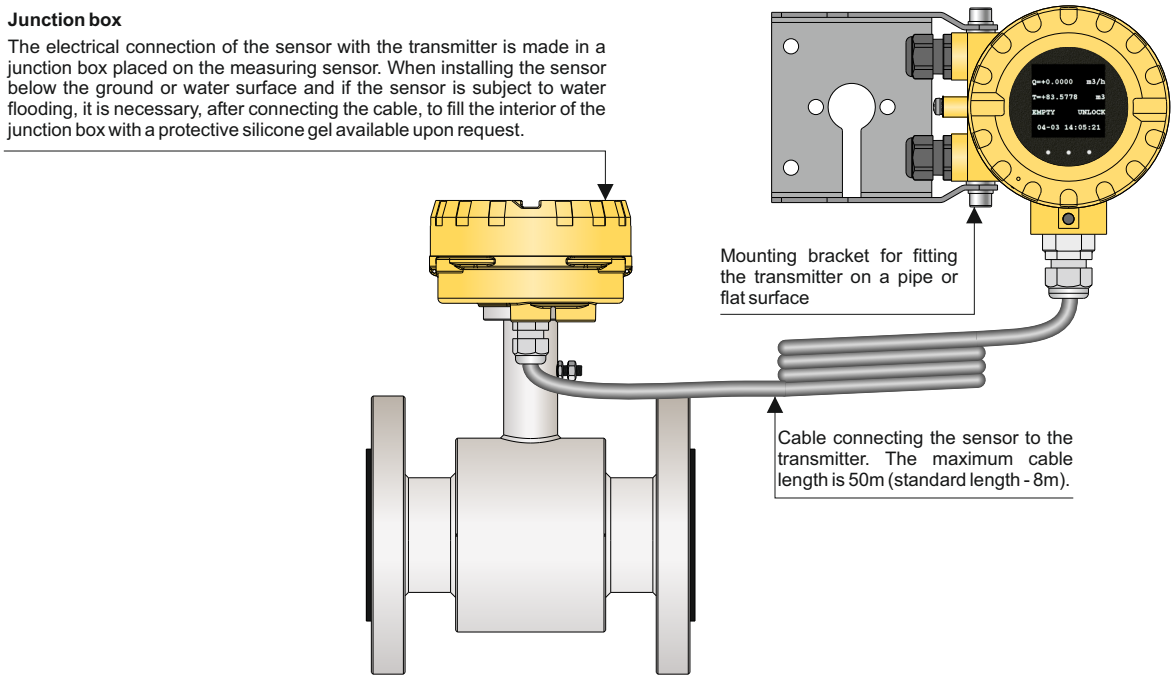

Dimensions of sensor

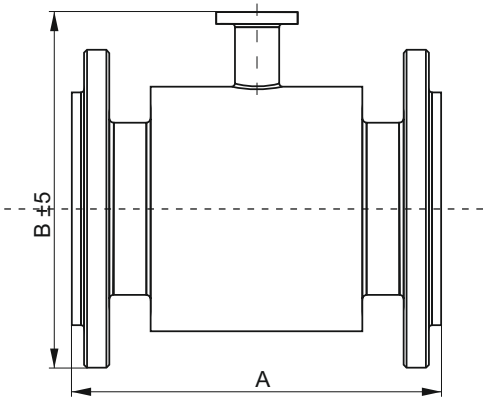

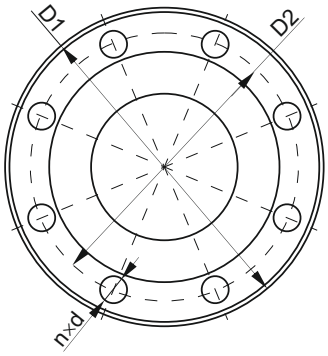

DN 10 – DN 150 A ± 5 mm
DN 200 – DN 1000 A ± 10 mm

		Dimensions [mm]						Weight
DN	PN	A	B	D1	D2	d	n	kg
10	16	200	153	90	60	14	4	5
15			155	95	65	14	4	5
20			160	105	75	14	4	6
25			167	115	85	14	4	7
32			180	140	100	18	4	8
40			185	150	110	18	4	8
50			191	165	125	18	4	9
65			209	185	145	18	4	11
80			224	200	160	18	8	13
100		250	245	220	180	18	8	16
125			276	250	210	18	8	21
150		300	305	285	240	22	8	26
200		350	375	340	295	22	12	36
250		400	430	405	355	26	12	60
300		500	487	460	410	26	12	80
350			542	520	470	26	16	90
400		600	615	580	525	30	16	120
450			657	640	585	30	20	130
500			750	715	650	33	20	150
600			870	840	770	36	20	240
700		700	927	910	840	36	24	340
800		800	1050	1025	950	39	24	400
900		900	1145	1125	1050	39	28	480
1000		1000	1285	1255	1170	42	28	600

		Dimensions [mm]						Weight
ANSI	lbs	A	B	D1	D2	d	n	kg
1/2”	150	200	155	88,9	60,45	15,7	4	5
3/4"			160	98,6	69,85	15,7	4	6
1”			167	108	79,25	15,7	4	7
1 1/4"			180	117,3	88,9	15,7	4	8
1 1/2"			185	127	98,6	15,7	4	8
2”			191	152,4	120,7	19,1	4	9
2 1/2"			209	177,8	139,7	19,1	4	11
3”			224	190,5	152,4	19,1	4	13
4”		250	245	228,6	190,5	19,1	8	16
5”			276	254	215,9	22,4	8	21
6”		300	305	279,4	241,3	22,4	8	26
8”		350	375	342,9	298,5	22,4	8	36
10”		450	430	406,4	362	25,4	12	60
12”		500	487	482,6	431,8	25,4	12	80
14”		550	542	533,4	476,3	28,4	12	90
16”		600	615	596,9	539,8	28,4	16	120
18”			657	635	577,9	31,75	16	130
20”			750	698,5	635	31,75	20	150
24”			870	812,8	749,3	35,1	20	240

Electrical diagrams

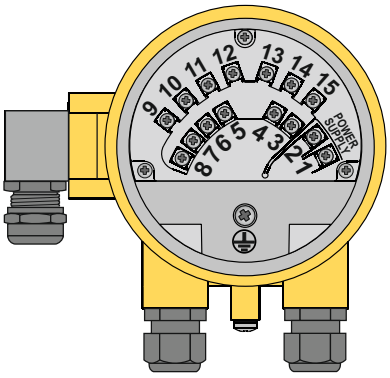

	Terminal	Description		
Power supply	1	90...260V AC	(-)	10...36V DC (on request)
	2		(+)	
2-state output 1	3	reverse polarity protection, galvanic insulation, passive		
	4			
Pulse/frequency output	5	reverse polarity protection, galvanic insulation, passive		
	6			
Current output 4÷20 mA	7	(+)		active (passive on request)
	8	(-)		
Communication	9	RS 485 A		
	10	RS 485 B		
	11	RS 485 GND / shield		
2-state input (passive)	12	reverse polarity protection, galvanic insulation		
	13			
2-state output 2	14	reverse polarity protection, galvanic insulation, passive		
	15			

Examples of installation

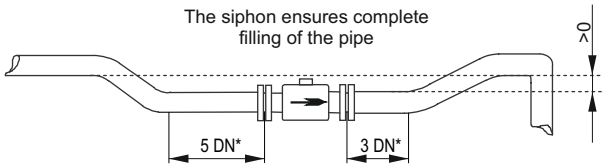

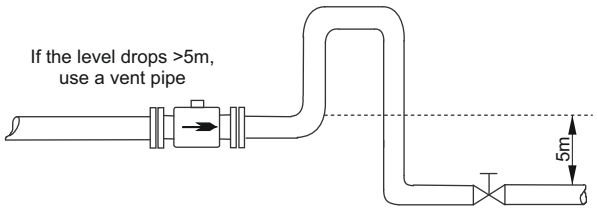

* Straight pipeline sections of 5x and 3x flowmeter diameter in front of and behind the sensor

If it is not possible to maintain the required straight sections, we recommend using a flowmeter with a narrowing of the sensor cross-section (special **CP** design).

Installing a standard flow meter without taking into account the recommended straight pipeline sections may result in an increase in measurement error by approximately 1.5% of the indication value.

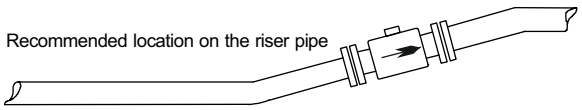

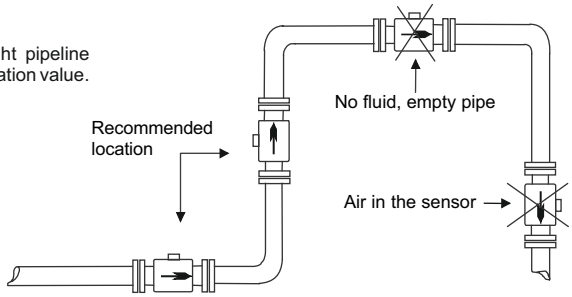

Ordering procedure

PEM-1000ALW /___/___/___/___/___/___/___/___

PEM-1000NW /___/___/___/___/___/___/___/ L =___ m/___

Special option: **IP68, IP67, 0,2%, 304, Qmax, PZH, WT, CP, OOC1, OOC2, IOC, GR, KAL**

Nominal diameter: **DN10...1000 / 0,5"...40"**

Pressure rating: **PN16, ANSI150**

Liner material: **HR (hard rubber), PTFE (Teflon), Neopren**

Electrodes material: **316L, Hastelloy**, **Tantalum**

Communication: **Modbus RTU/RS 485**

Certificate:
TC - test certificate (standard, free of charge)
CC - calibration certificate (on water calibration rig)

Cable length (standard L=8m)

Power supply: **90...260 V AC, 10...36 V DC**

Special options:

0,2% – accuracy 0,2% (for 20…100%$Q_{10m/s}$)
OOC1; OOC2 – two-state outputs (one or two)
IOC – two-state input
304 – flange and flow tube made in SS304 (DN10…DN200)
IP68 – sensor protection class IP68 (NW version only)
IP67 – transmitter protection class IP67
WT – medium temp. up to 130°C (PTFE lining)
CP – version for measurement without recommended straight sections of pipeline – for DN50…DN300, HR version
PZH – approval for contact with potable water (PTFE lining)
Qmax – non-standard value of Qmax.
GR – set of SS304 grounding rings