SAMOSTATNÉ VÍCETÓNOVÉ SIRÉNY

Série ES1/ES2

C110620005
ES1 siréna červená 32 tónů 24V



- Výběr ze 32 druhů tónů
- 86 - 106 dB
- Krytí IP 65
- Příznivá cena

POPIS PRODUKTU

Sirény pro vnitřní i venkovní použití (IP 65), druh tónu je volitelný DIP-přepínači uvnitř. Oba typy lze objednat v červené a bílé barvě.

SPECIFIKACE

Barva těla	Červená RAL 3000
Druh montáže	Nezávislý
Frekvence max.	2900 Hz
Frekvence min.	440 Hz
Hladina zvuku max.	106 dB
Hladina zvuku min.	86 dB
Hmotnost	250 g
Jmenovitý proud max.	0,035 A
Jmenovitý proud min.	0,006 A
Napájecí napětí DC max.	24 V DC
Napájecí napětí DC min.	24 V DC
Ovládání zvuku	Ano
Počet tónů	32 ks
Provozní teplota max.	70 °C
Provozní teplota min.	-20 °C
Průměr	93 mm
Průřez vodičů	2,5 mm²

Třída krytí	IP65

The sound pressure decreases by 6 dB when doubling the distance; the following distance table is to be seen as Indication, as also factors like tone type, wind speed, wind direction, humidity, weather conditions etc. do influence the sound pressure level.

Distance (m)	Sound pressure dB (A)																			
1	65	70	75	80	85	90	92	94	96	98	100	102	104	106	108	110	112	114	116	118	120
2	59	64	69	74	79	84	86	88	90	92	94	96	98	100	102	104	106	108	110	112	114
3	55	60	65	70	75	80	82	84	86	88	90	92	94	96	98	100	102	104	106	108	110
5	51	56	61	66	71	76	78	80	82	84	86	88	90	92	94	96	98	100	102	104	106
10	45	50	55	60	65	70	72	74	76	78	80	82	84	86	88	90	92	94	96	98	100
20	39	44	49	54	59	64	66	68	70	72	74	76	78	80	82	84	86	88	90	92	94
30	35	40	45	50	55	60	62	64	66	68	70	72	74	76	78	80	82	84	86	88	90
50		36	41	46	51	56	58	60	62	64	66	68	70	72	74	76	78	80	82	84	86
100				40	45	50	52	54	56	58	60	62	64	66	68	70	72	74	76	78	80
200					39	44	46	48	50	52	54	56	58	60	62	64	66	68	70	72	74
500							38	40	42	44	46	48	50	52	54	56	58	60	62	64	66

The sound pressure decreases by 6 dB when doubling the distance

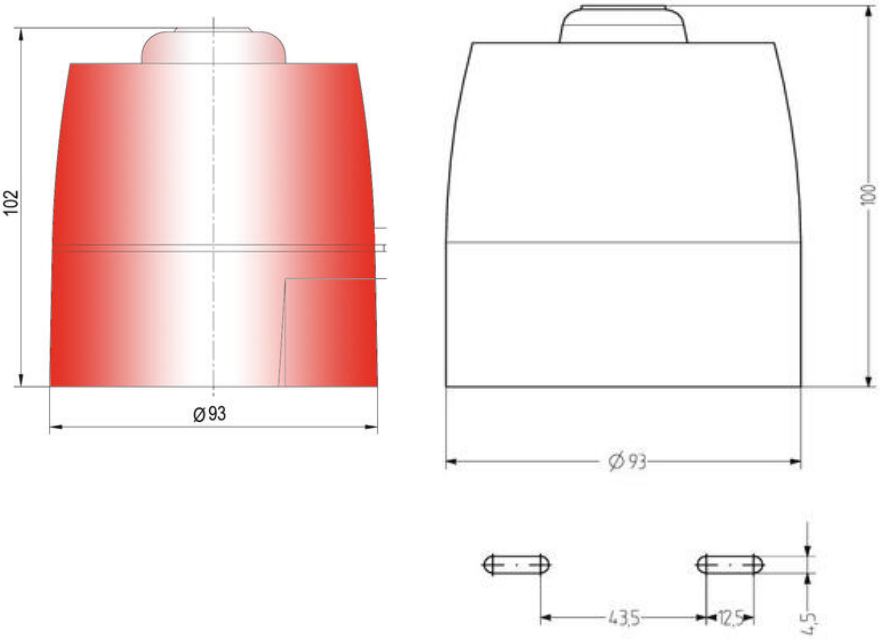

Tone table

ES1

No.	Sound	Denomination	DIP	2nd stage alarm Hz
1	LF sweep	800-1.000 Hz @ 0.5 s	1111	800 cont
2	alternative warble	800/960 Hz @ 2 Hz	1110	800 cont
3	warble tone	800/1.000 Hz @ 0.5 s	1101	800 cont
4	alternative warble	500/600 Hz @ 2 Hz	1100	500 cont
5	HF back up interrupted tone	2.800 Hz @ 1.0 s on/off	1011	2.800 cont
6	LF back up alarm	800 Hz @ 150 ms on/off	1010	800 cont
7	HF back up interrupted tone, fast	2.800 Hz @ 150 ms on/off	1001	800 cont
8	LF continous tone BS5839	800 Hz cont	1000	same tone
9	sweep tone	800/900 Hz @ 1 Hz	0111	800 cont
10	Australian slow whoop	interrupted tone 970 Hz @ 0,625 ms on/off	0110	500-1.200 3.75 s on 0.25 s off
11	Dutch sweep tone	970 Hz cont	0101	500-1.200 2.5 s on 0.5 s off
12	analogous sweep tone	500/600 Hz @ 2 Hz	0100	500 cont
13	sweep tone	800/970 Hz @ 2 Hz	0011	800 cont
14	alternate HF slow sweep	2.350/2.900 Hz @ 3 Hz	0010	2.400 cont
15	fast HF sweep	2.400-2.800 Hz @ 7Hz	0001	2.400 cont
16	US temporal pattern LF	950 Hz 0.5 s on/0.5 s off x 3; off for 1.5 s; repeat	0000	800 cont
17	Interrupted tone BS Standard	800 Hz @ 0.5 s on/off	0111	800 cont
18	ISO8201 LF BS5839 Pt 1 1988	Intermittent 970 Hz @ 0.5 s on/off	0110	same tone
19	interrupted tone, medium	1.000 Hz @ 0.25 s on/off	0101	800 cont
20	ISO8201 HF	970 Hz @ 0.5 s on/off	0100	same tone
21	continuous tone	1000 Hz	0011	same tone
22	LF buzz	800-950 Hz sweep @ 80 Hz	0010	800 cont
23	HF continuous	2.800 Hz	0001	2.800 cont
24	sweep tone	800-970 Hz @ 9 Hz	0000	800 cont
25	German DIN tone	sweep 1.000-500 Hz @ 1 Hz	1111	800 cont
26	Swedish fire signal	intermittent 660 Hz @ 150 ms on/off	1110	same tone
27	French tone AFNOR	554 Hz @ 100 ms and 440 Hz @ 400 ms	1101	800 cont
28	Swedish all clear signal	continuous 660 Hz	1100	same tone
29	US temporal pattern HF	2.900 Hz @ 0.5 s on/off x 3; then off for 1.5 s; repeat	1011	2.900 cont
30	Siren 2-way ramp, short	500/1.200 Hz rising then falling 0.25 s	1010	800 cont
31	FF1063.1 Telecom	alternating tone 800/970 Hz @ 2 Hz	1001	800 cont
32	Siren 2-way ramp, long	500/1.200 Hz @ 3 s rising/3 s falling	1000	800 cont

The sound pressure decreases by 6 dB when doubling the distance; the following distance table is to be seen as Indication, as also factors like tone type, wind speed, wind direction, humidity, weather conditions etc. do influence the sound pressure level.

Distance (m)	Sound pressure dB (A)																			
1	65	70	75	80	85	90	92	94	96	98	100	102	104	106	108	110	112	114	116	118	120
2	59	64	69	74	79	84	86	88	90	92	94	96	98	100	102	104	106	108	110	112	114
3	55	60	65	70	75	80	82	84	86	88	90	92	94	96	98	100	102	104	106	108	110
5	51	56	61	66	71	76	78	80	82	84	86	88	90	92	94	96	98	100	102	104	106
10	45	50	55	60	65	70	72	74	76	78	80	82	84	86	88	90	92	94	96	98	100
20	39	44	49	54	59	64	66	68	70	72	74	76	78	80	82	84	86	88	90	92	94
30	35	40	45	50	55	60	62	64	66	68	70	72	74	76	78	80	82	84	86	88	90
50		36	41	46	51	56	58	60	62	64	66	68	70	72	74	76	78	80	82	84	86
100				40	45	50	52	54	56	58	60	62	64	66	68	70	72	74	76	78	80
200					39	44	46	48	50	52	54	56	58	60	62	64	66	68	70	72	74
500							38	40	42	44	46	48	50	52	54	56	58	60	62	64	66

The sound pressure decreases by 6 dB when doubling the distance